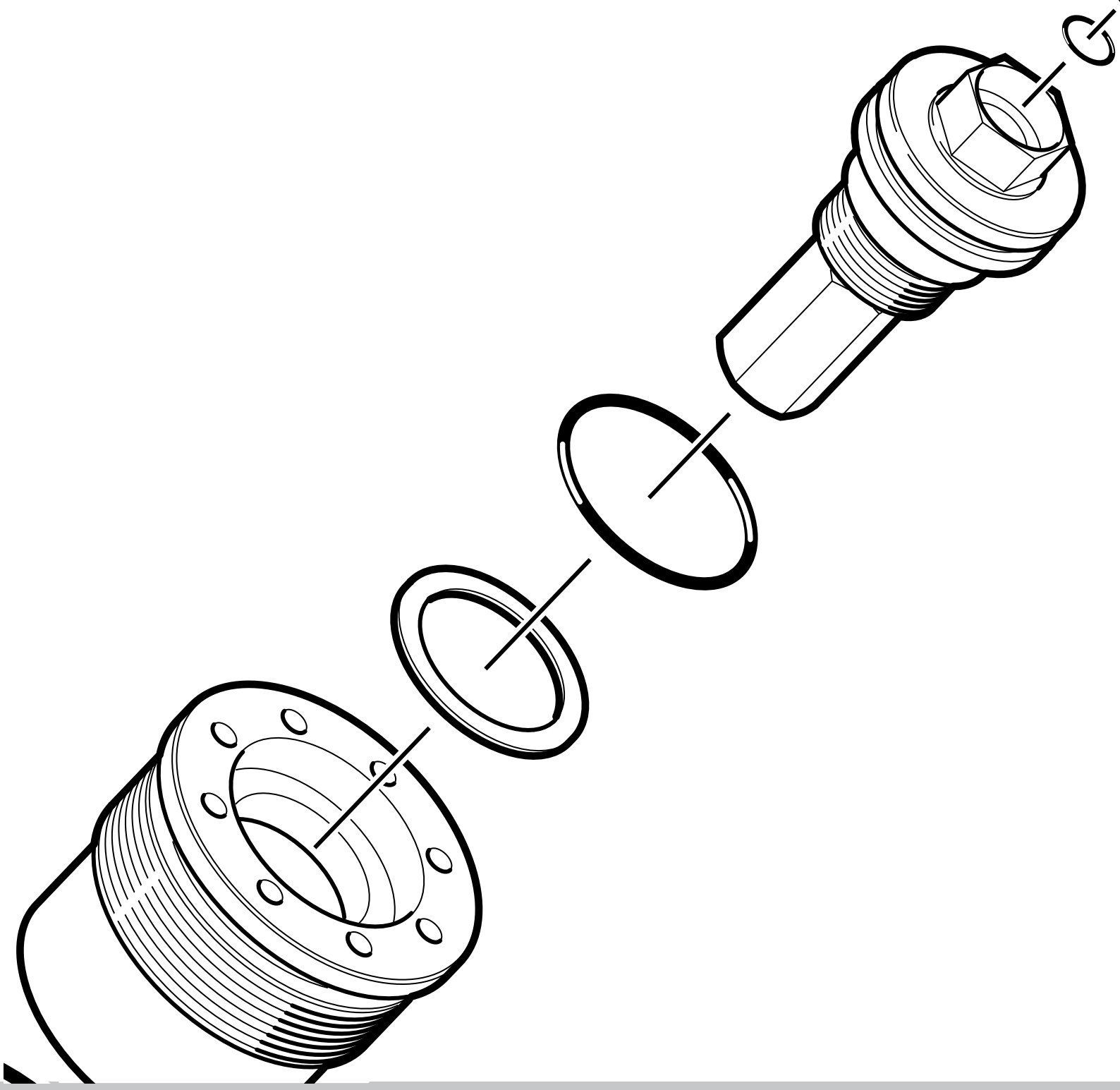

Front Fork kit for Suzuki GSX-R 1000

FGK 2210

Spare Parts List

ÖHLINS®

ADVANCED SUSPENSION TECHNOLOGY

Safety Precautions

Note!

The front fork is a very important part of the vehicle and will therefore affect the stability of the vehicle.

Read and make sure that you understand the information in this manual and the mounting instructions before you use this product. If you have any questions regarding installation or maintenance please contact your nearest Öhlins dealer.

Öhlins Racing AB can not be held responsible for any damage to the front fork, vehicle, other property or injury to persons, if the instructions for installing and maintenance are not followed exactly.

Warning!

This product was developed and designed exclusively for a specific vehicle model and should only be installed on the intended vehicle model in its original condition as delivered from the vehicle manufacturer.

This product contains pressurized nitrogen gas (N^2). Do not open, service or modify this product without proper education (authorized Öhlins dealer/distributor) or proper tools.

After installing this product, take a test ride at low speed to make sure that your vehicle has maintained its stability.

Note!

When working on this product, always consult your Vehicle Service Manual.

This Manual should be considered as a part of the product and should therefore accompany the product throughout its life cycle.

Safety Symbols

In this manual, mounting instructions and other technical documents, important information concerning safety is distinguished by the following symbols:

The Safety Alert Symbol means: Warning! Your safety is involved.

Warning!

The Warning Symbol means: Failure to follow warning instructions can result in severe or fatal injury to anyone working with, inspecting or using the front fork, or to bystanders.

Caution!

The Caution Symbol means: Special precautions must be taken to avoid damage to the front fork.

Note!

The Note Symbol indicates information that is important regarding procedures.

© Öhlins Racing AB. All rights reserved. Any reprinting or unauthorized use without the written permission of Öhlins Racing AB is prohibited.
Printed in Sweden.

Contents

Fig 1 - Top cap 3
Fig 2 - Shaft Assembly 4
Fig 3 - Damping unit 5

Figure 1 - Top Cap

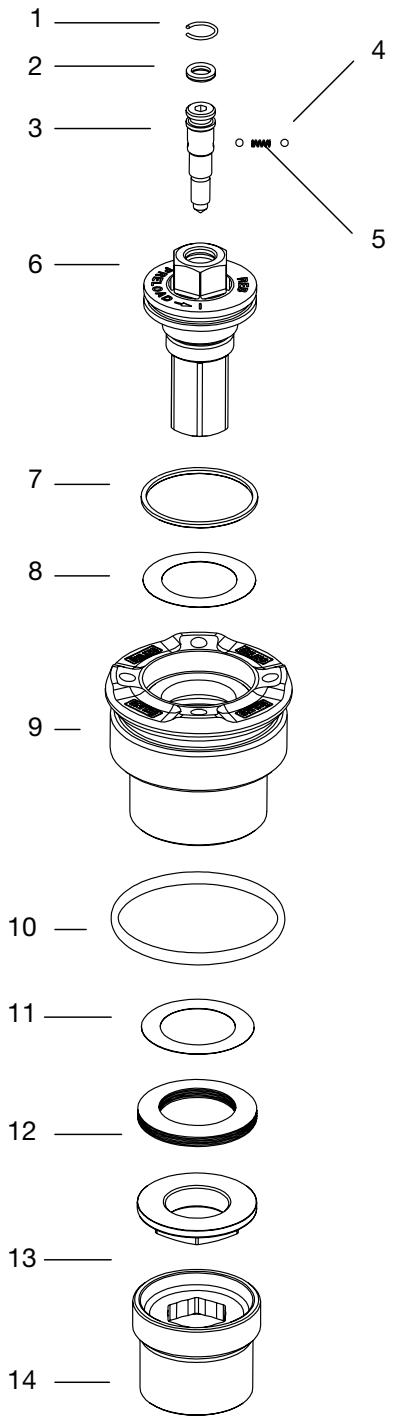

Pos	Part No	Pcs	Description	Notes
1-1	01473-01	2	Circlip	
1-2	00577-01	2	O-ring	
1-3	01467-02	2	Adjuster	
1-4	00884-04	4	Ball	
1-5	01474-01	2	Spring	
1-6	03312-07	1	Adjuster	comp.
1-6	03312-08	1	Adjuster	rebound
1-7	00338-72	2	O-ring	
1-8	03309-01	2	Shim	
1-9	21653-07	2	Housing	
1-10	00576-02	2	O-ring	
1-11	03309-01	2	Shim	
1-12	03317-01	8	Spring washer	
1-13	03313-01	2	Nut	
1-14	03315-01	2	Preload socket	

Figure 2 - Shaft Assembly

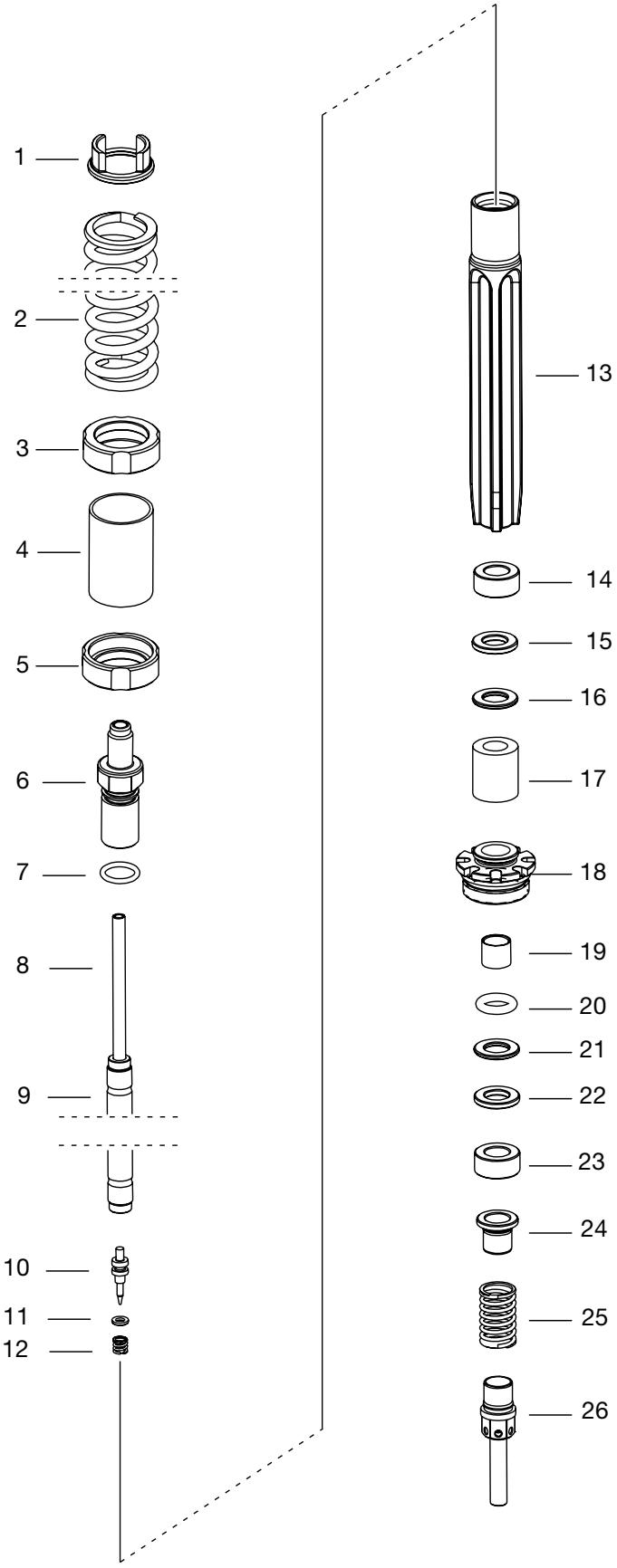

Pos	Part No	Pcs	Description	Notes
2-1	03316-02	2	Spring support	
2-2	08790-85	2	Spring	or 04744-85
	08790-90	2	Spring	or 04744-90
	08790-95	2	Spring	or 04744-95
	08790-10	2	Spring	or 04744-10
	08790-05	2	Spring	or 04744-05
	08790-11	2	Spring	or 04744-11
2-3	01438-04	4	Guide ring	
2-4	01460-59	2	Preload tube	
2-6	03314-12	2	Shaft extension	
2-7	00338-76	2	O-ring	
2-8	02366-09	2	Adjustment rod	
2-9	21637-02	2	Shaft	
2-10	01698-15	2	Needle	
2-11	00438-31	2	O-ring	
2-12	02322-01	2	Spring	
2-13	21663-01	2	Guide sleeve	
2-14	21620-xx		Spacer	See Spec.card
2-15	21620-xx		Spacer	See Spec.card
2-16	21620-xx		Spacer	See Spec.card
2-17	01580-01	2	Bump rubber	
2-18	21647-01	2	Seal head	
2-19	00110-03	2	Bushing	
2-20	00438-28	2	O-ring	
2-21	21620-xx	4	Spacer	See Spec.card
2-22	21620-xx	2	Spacer	See Spec.card
2-23	21620-xx	2	Spacer	See Spec.card
2-24	01653-01	2	Sleeve top out spring	
2-25	01585-01	2	Top out spring	
2-26	01654-03	2	Piston holder	

Figure 3 - Damping unit

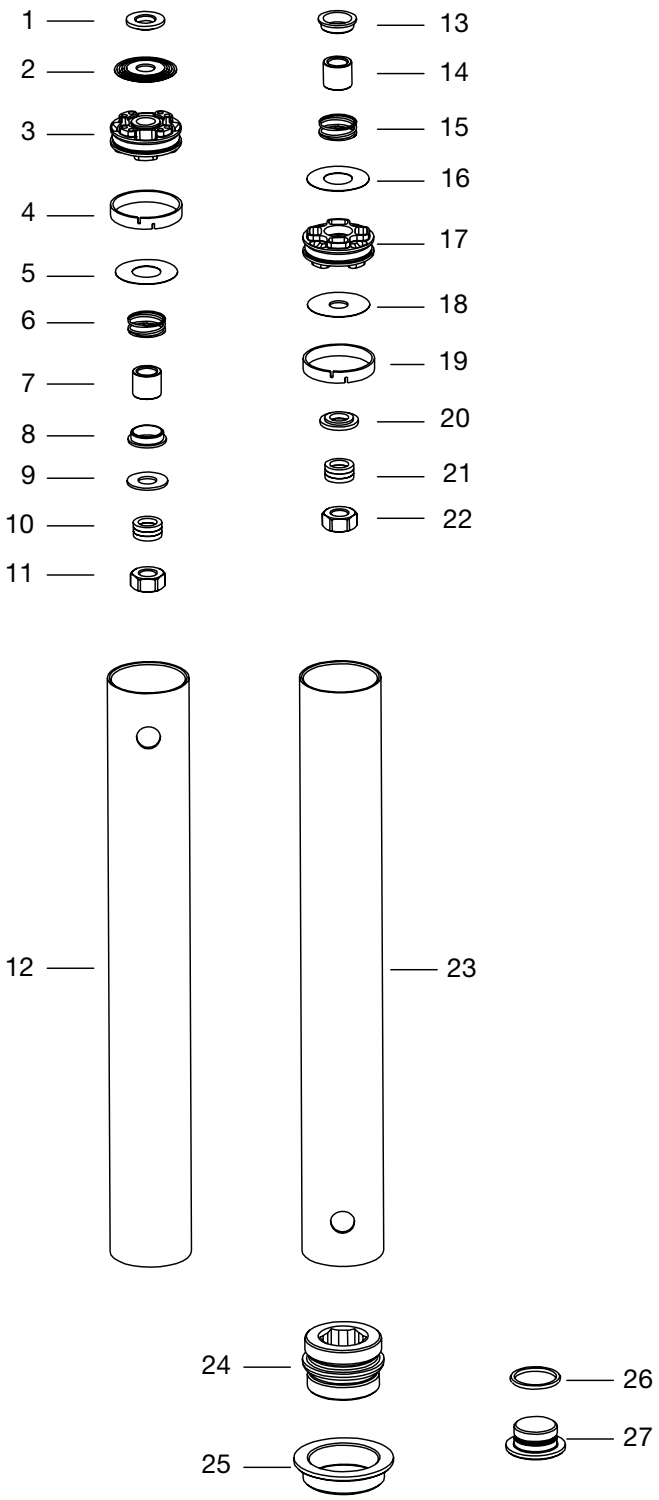

Pos	Part No	Pcs	Description	Notes
3-1	01652-xx	1	Clamp washer	See Spec.card
3-2	-	-	Shim stack	See Spec.card
3-3	21645-10	1	Piston	Compression
3-4	01447-03	1	Piston ring	Compression
3-5	00520-26	1	Check valve shim	Compression
3-6	01693-03	1	Check valve spring	Compression
3-7	01669-06	1	Sleeve	Compression
3-8	01672-01	1	Spring collar	Compression
3-9	00120-01	1	Washer	Compression
3-10	01674-01	3	Washer	Compression
3-11	01657-01	1	Nut	Compression
3-12	21646-01	1	Cylinder tube	Compression
3-13	01672-01	1	Spring collar	Rebound
3-14	01669-06	1	Sleeve	Rebound
3-15	01693-03	1	Check valve spring	Rebound
3-16	00520-26	1	Check valve shim	Rebound
3-17	21645-10	1	Piston	Rebound
3-18	-	-	Shim stack	See Spec.card
3-19	01447-03	1	Piston ring	Rebound
3-20	00641-xx	1	Clamp washer	See Spec.card
3-21	01674-01	4	Washer	Rebound
3-22	01657-01	1	Nut	Rebound
3-23	21646-01	1	Cylinder tube	Rebound
3-24	21648-03	2	Adaptor	
3-25	21650-04	2	Adaptor	
3-26	00338-40	2	O-ring	
3-27	21652-02	2	Plug	

Öhlins Spare Parts List *FGK 2210* | Issued 2012-02-22 | © 2012 Öhlins Racing AB

Your Öhlins retailer:

Öhlins Racing AB
Box 722
SE-194 27, Upplands Väsby
Sweden

Phone: +46 (0)8 590 025 00
Fax: +46 (0)8 590 025 80
www.ohlins.com

ADVANCED SUSPENSION TECHNOLOGY

www.ohlins.com