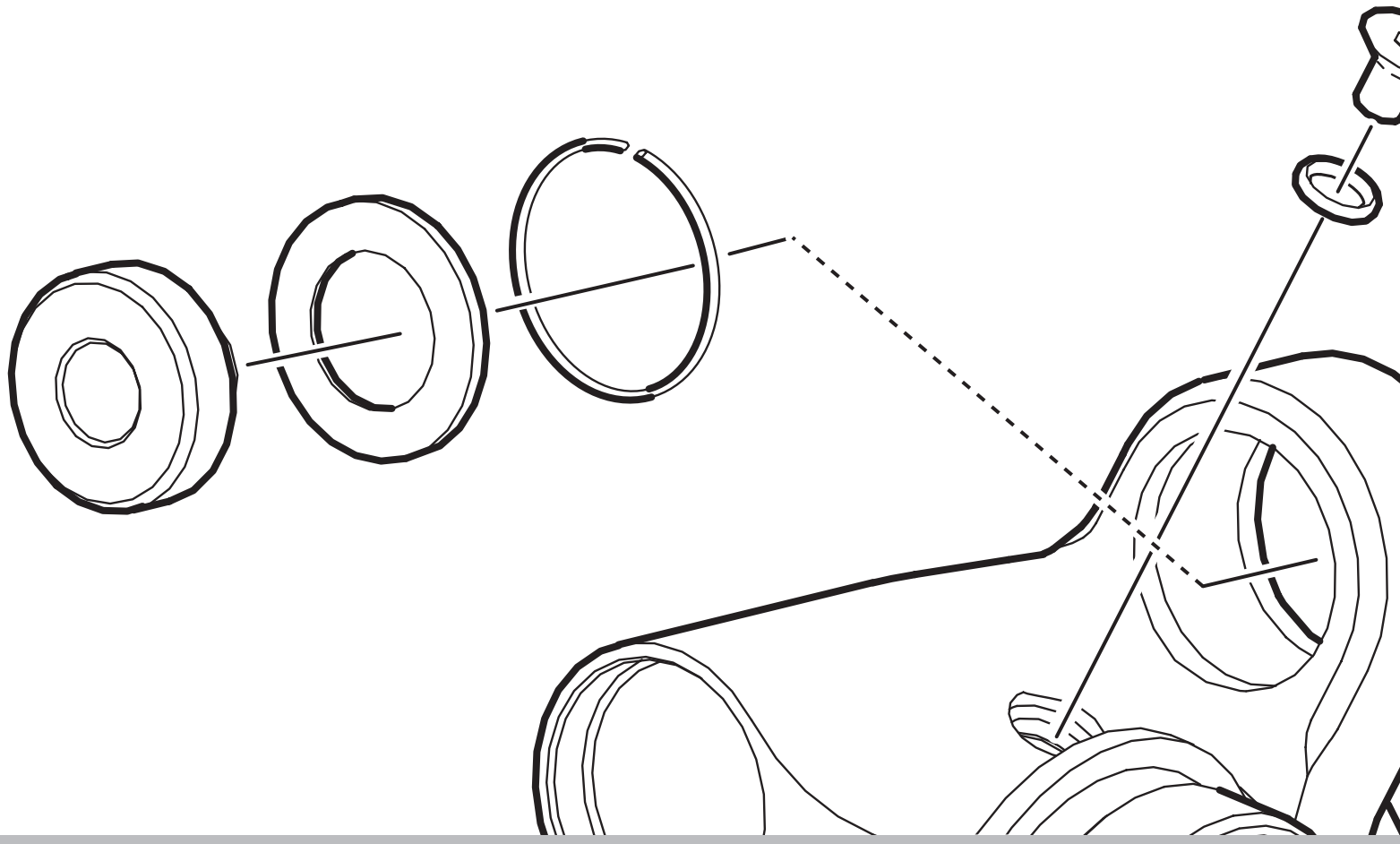

Shock Absorber BMW R 1200 GS ADV

BM 0471

Spare Parts List

ÖHLINS®

ADVANCED SUSPENSION TECHNOLOGY

Safety Precautions

Note!

The shock absorber is a very important part of the vehicle and will therefore affect the stability of the vehicle.

Read and make sure that you understand the information in this manual and the mounting instructions before you use this product. If you have any questions regarding installation or maintenance please contact your nearest Öhlins dealer.

Öhlins Racing AB can not be held responsible for any damage to the shock absorber, vehicle, other property or injury to persons, if the instructions for installing and maintenance are not followed exactly.

Warning!

This product was developed and designed exclusively for a specific vehicle model and should only be installed on the intended vehicle model in its original condition as delivered from the vehicle manufacturer.

This product contains pressurized nitrogen gas (N^2). Do not open, service or modify this product without proper education (authorized Öhlins dealer/distributor) or proper tools.

After installing this product, take a test ride at low speed to make sure that your vehicle has maintained its stability.

Note!

When working on this product, always consult your Vehicle Service Manual.

This Manual should be considered as a part of the product and should therefore accompany the product throughout its life cycle.

Safety Symbols

In this manual, mounting instructions and other technical documents, important information concerning safety is distinguished by the following symbols:

The Safety Alert Symbol means: Warning! Your safety is involved.

Warning!

The Warning Symbol means: Failure to follow warning instructions can result in severe or fatal injury to anyone working with, inspecting or using the shock absorber, or to bystanders.

Caution!

The Caution Symbol means: Special precautions must be taken to avoid damage to the shock absorber.

Note!

The Note Symbol indicates information that is important regarding procedures.

© Öhlins Racing AB. All rights reserved. Any reprinting or unauthorized use without the written permission of Öhlins Racing AB is prohibited.
Printed in Sweden.

Pos	Part No.	Pcs	Description	Type/Remarks
1-1	01054-02	1	End eye	
1-3	00536-04	1	Ball joint	
1-4	00534-01	2	Seal	
1-5	01218-18	2	Spacer	
1-11	01016-01	2	Seal rebound adjuster	
1-12	01128-01	1	Adjustment knob	
1-13	01030-01	1	Pin	
1-14	61017-01	1	Stop washer	

Fig.1 **End eye**

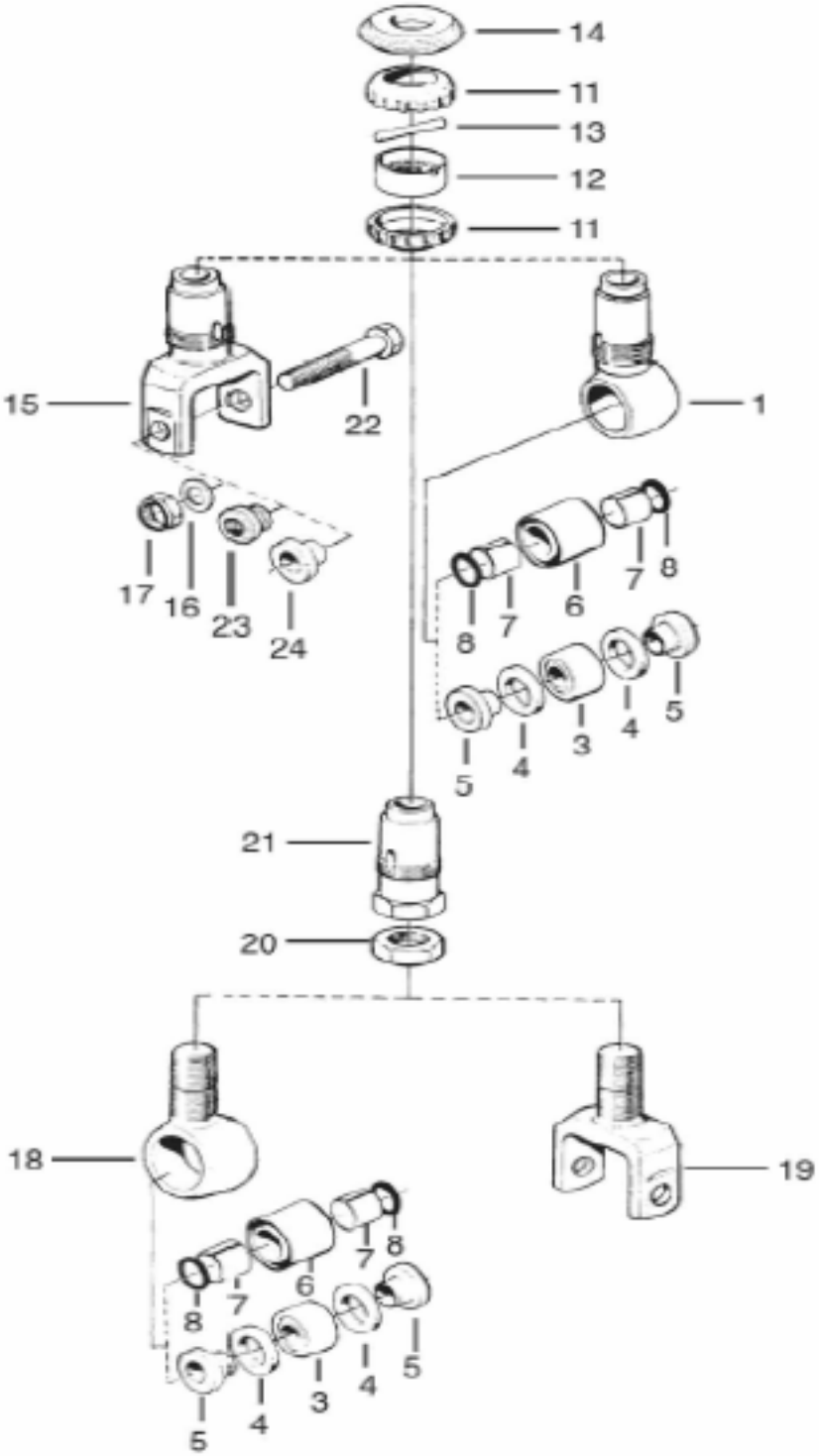

Pos	Part No.	Pcs	Description	Type/Re-marks
	0191-06	1	Sticker "Öhlins"	
	00196-01	1	Sticker "Warning"	
2-1	01282-03	1	Cylinder head	
2-5	00338-32	1	O-ring	
2-7	04211-04	1	Cylinder tube	
2-8	00536-04	1	Ball joint	
2-10	00534-01	2	Seal	
2-11	01218-39	2	Spacer	
2-14	00338-07	1	O-ring	
2-16	00338-59	1	O-ring	
2-17	01050-01	1	Screw	
2-18	00532-01	1	Lock nut	
2-19	00531-12	1	Spring platform	
2-20	00543-01	1	Washer	
2-22	00629-01	1	Spring clip	
2-24	00603-03	1	Valve assy	
	01092-69	1	Spring	

Fig.2 Cylinder head/tube

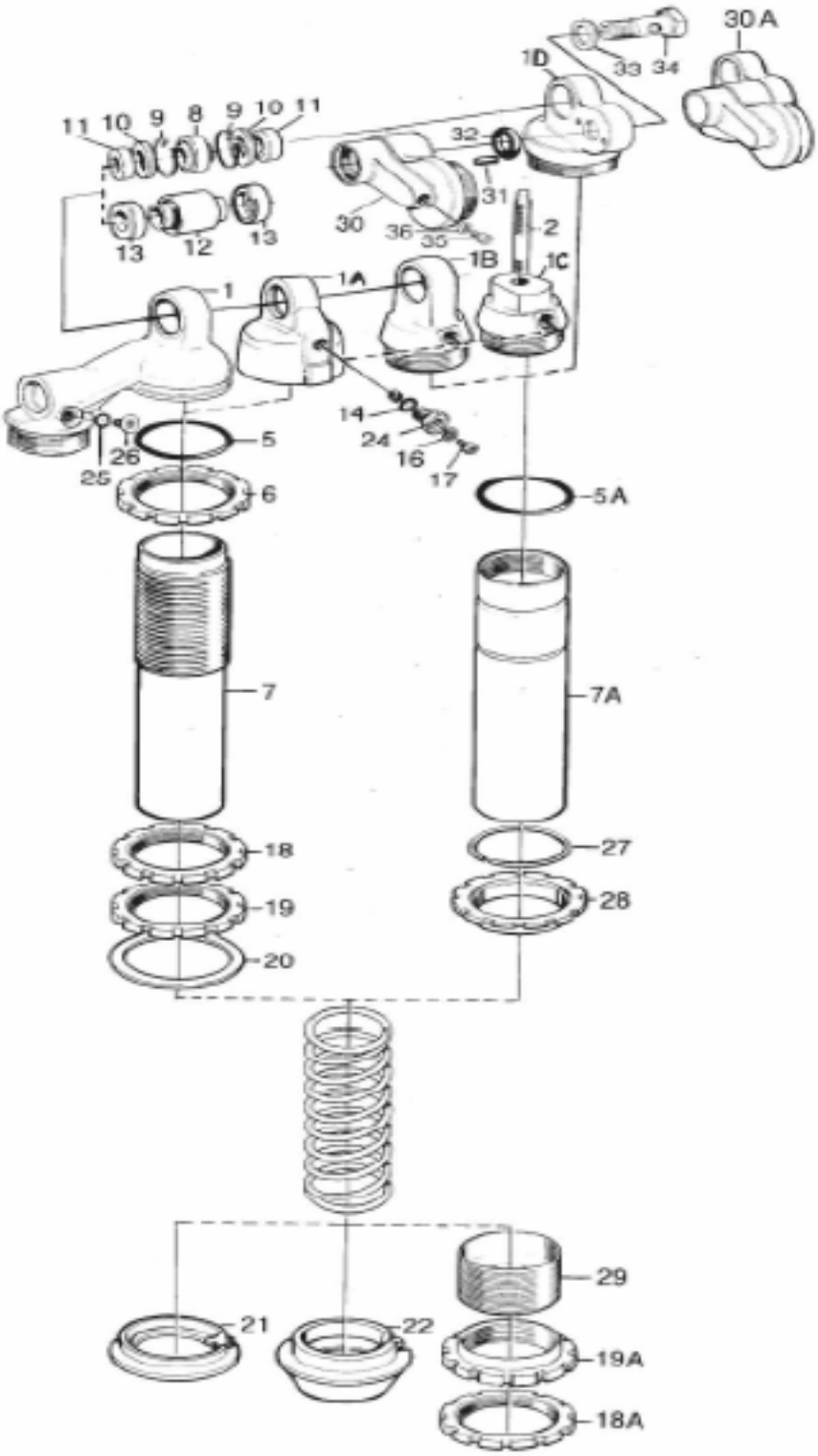

Shaft assy

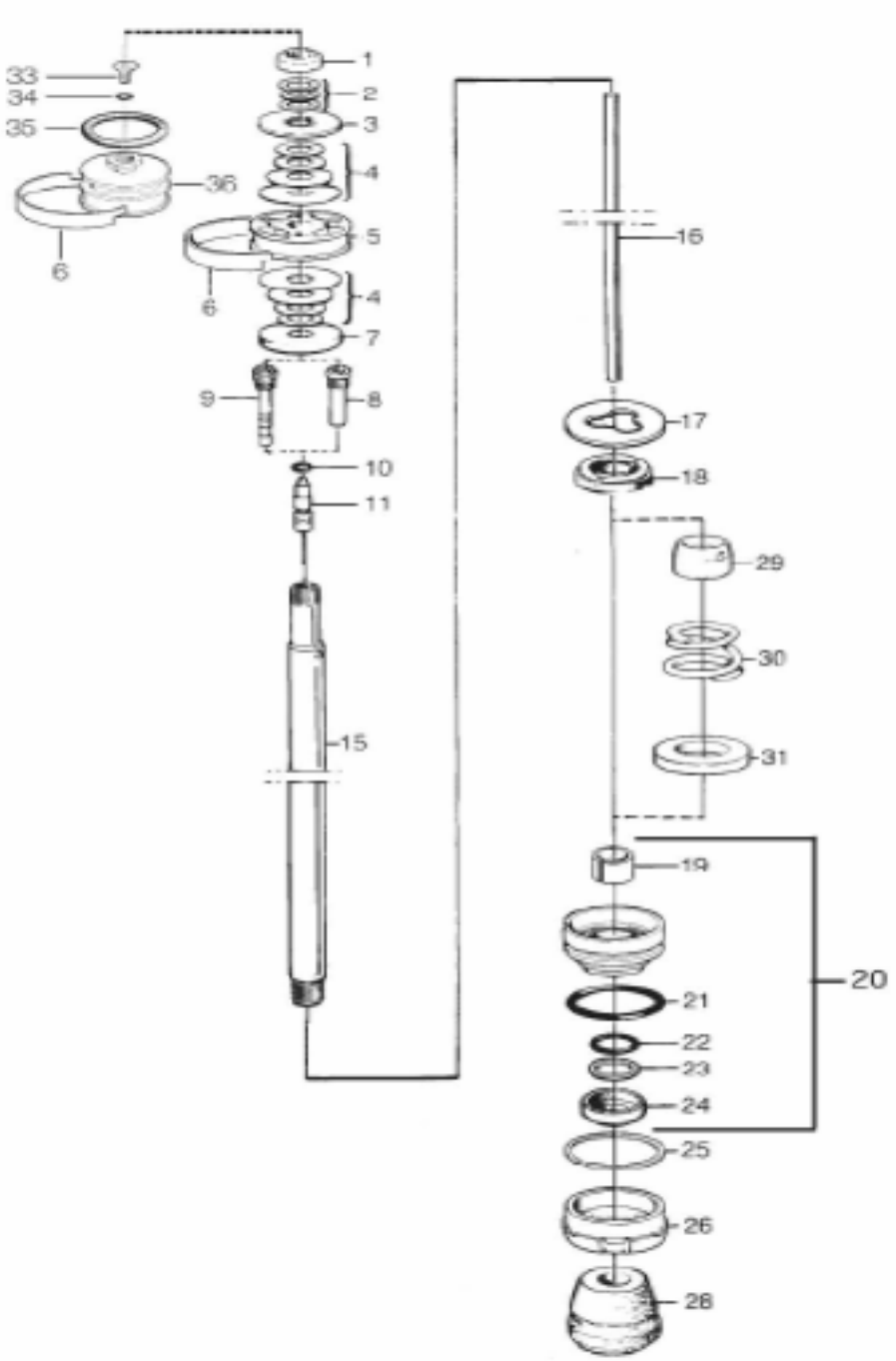

Fig.3

Pos	Part No.	Pcs	Description	Type/Re-marks
3-1	00539-01	1	Lock nut	
3-2	00578-01	3	Washer	
3-3	00519-07	1	Stop washer	
3-4			Shims See spec.card	
3-5	01114-14	1	Piston	
3-6	00541-01	2	Piston ring	
3-7	00519-04	1	Valve stop	
3-8	05621-02	1	Shaft jet	
3-10	00338-14	1	O-ring	
3-11	05655-02	1	Adjustment needle	
3-15	05500-06	1	Shaft	
3-16	00566-29	1	Adjustment shaft	
3-17	01069-02	2	Spacer	
3-17	01069-03	2	Spacer	
3-18	05115-01	1	Stop rubber	
3-19	01056-13	1	Bushing	
3-20	05129-04	1	Seal head assy	
3-21	00576-01	1	O-ring	
3-22	01027-01	1	X-ring	
3-23	01032-01	1	Back up ring	
3-24	01031-02	1	Scraper	
3-25	00575-01	1	Circlip	
3-26	01065-01	1	End cap	
3-28	00563-03	1	Bump rubber	
3-33	00382-01	1	Screw	
3-34	00338-01	1	O-ring	
3-35	00338-13	1	O-ring	
3-36	01005-01	1	Piston	

Öhlins Spare Parts List BM 0471 | Issued 2018-10-03 | © Öhlins Racing AB

Your Öhlins retailer:

Öhlins Racing AB
Box 722
SE-194 27, Upplands Väsby
Sweden

Phone: +46 (0)8 590 025 00
Fax: +46 (0)8 590 025 80
www.ohlins.com

ADVANCED SUSPENSION TECHNOLOGY

www.ohlins.com