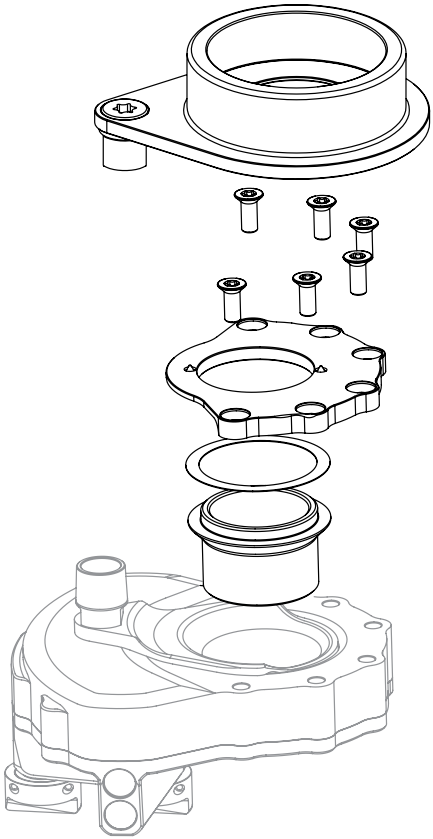

Note!

To be used together with SD 502.

Before installing this product, check the contents of the kit. If anything is missing, please contact an Öhlins dealer.

Kit Contents

		Part No	Pcs
Bracket assy	Screw 6x12	00382-29	2
	Pin	15549-02	1
	Bracket 47,5/50	15550-57	1
	Screw 4x10	00382-25	6
	X-ring	01027-09	1
	Tool NV19	04970-01	1
	Bracket	15505-13	1
	Plug	15507-02	1
	Washer 29.7/36.3/0.30	15527-03	1
	Nut M26x1	15552-11	1
	Seal Nut M28x1	15561-01	1

Please note that during storage and transportation, especially at high ambient temperature, some of the oil and grease used for assembling may leak and stain the packaging. This is in no way detrimental to the product, wipe off the excessive oil/grease with a cloth.

⚠ Warning!

Before installing this product, read the Öhlins Owner's Manual. The steering damper is an important part of your vehicle and will affect the stability.

SD 502 Mounting Kit for
Husqvarna TC250/449/450, TE250/310/449/450/510

SD 582

Mounting Instructions

ÖHLINS®
ADVANCED SUSPENSION TECHNOLOGY

How to install

⚠ Warning!

It is advisable to have an Öhlins dealer install the steering damper.

When installing, consult your Vehicle Service Manual.

⚠ Warning!

Make sure the vehicle is securely supported so that it will not tip.

1

Pre-assemble the steering damper. Place nut and washer (15552-11(D), 15527-03 (C)) according to figure. Use grease on both sides of the washer (C).

2

Mount the bracket (15505-13 (B)) with the six screws (00382-25 (A)). Use thread locking fluid and tighten to 4 Nm.

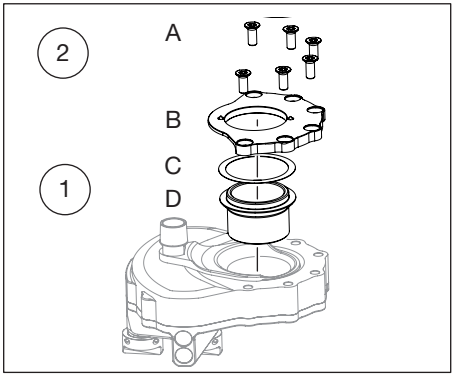

3

Put the motorcycle on a workstand. Remove the front fork and triple clamps. Remove original upper steering stem nut and washer (you will not need these parts to install the Öhlins steering damper).

4

Remove the outer ring of the upper steering head bearing. Remove the original dust seal on the bearing, if any.

5

Replace the outer ring with the bracket provided. The bracket must be press fitted into the steering head, use proper tools.

Caution!

The bracket must be installed in a straight line. Follow the sight line on the bracket, see figure.

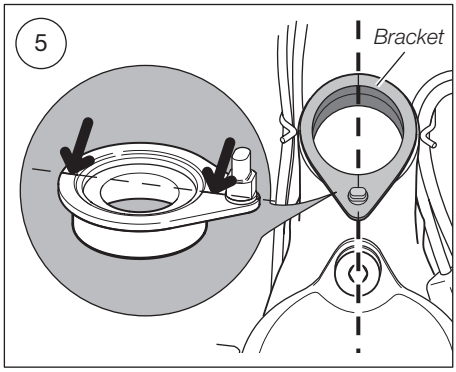

6

Apply some grease on the x-ring and install it (do not twist it) in to the groove on the seal nut, Put grease and install the original steering head bearing. The x-ring of the seal nut shall face down and enter the bracket.

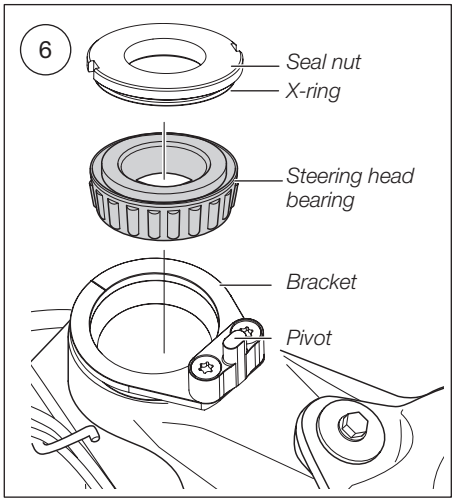

Recommended set-up

Motocross:

DL Valve	12 clicks
RTC Valve	6 clicks

Adjustments

⚠ Warning!

Before riding, always make sure that the basic settings made by Öhlins are according to recommended Set-up Data. Read about adjustments and setting up in the Öhlins Owner's Manual before you make any adjustments. Contact an Öhlins dealer if you have any questions about setting up the steering damper.

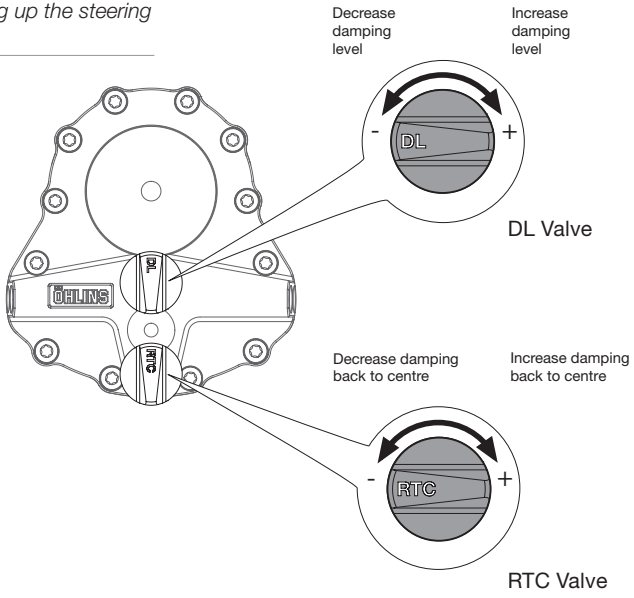

7

Put some grease inside the tower to avoid the noise that otherwise can occur.

8

Reinstall the lower triple clamp and tighten the provided seal nut.

9

Reinstall the upper triple clamp and fork legs. Tighten the bolts on the lower triple clamp to recommended tightening torque according to the Vehicle Service Manual.

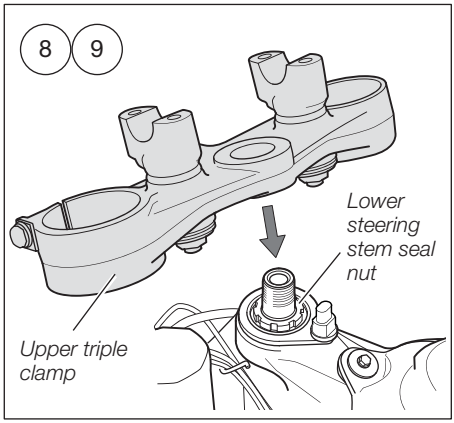

Note!

On some models the lower handlebar mount may intefere with the steering damper, if so please grind down the mount to make enough clearance.

Caution!

It is of critical importance that the damper is mounted in a straight line according to the figure. The two small pins will be pressed down into the upper triple clamp when the upper steering stem nut provided is tightened.

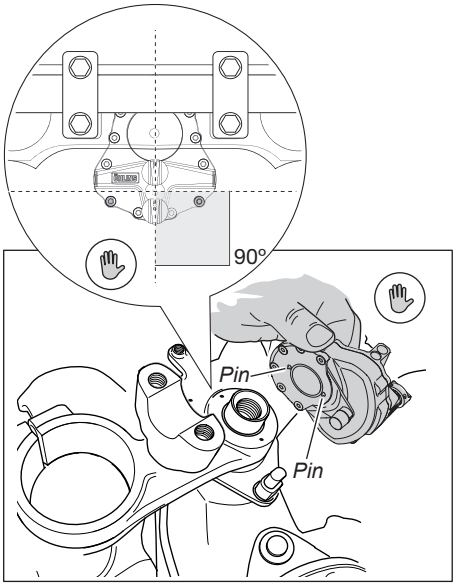

10

Use a torque wrench and tool 04970-01 (provided in this kit). Tighten the upper steering stem nut to 100 Nm.

Note!

All threads on the upper steering stem nut will not be used, that is correct as long as the nut is tightened properly.
Recommendation: Minimum 4 [four] full turns of engagement.

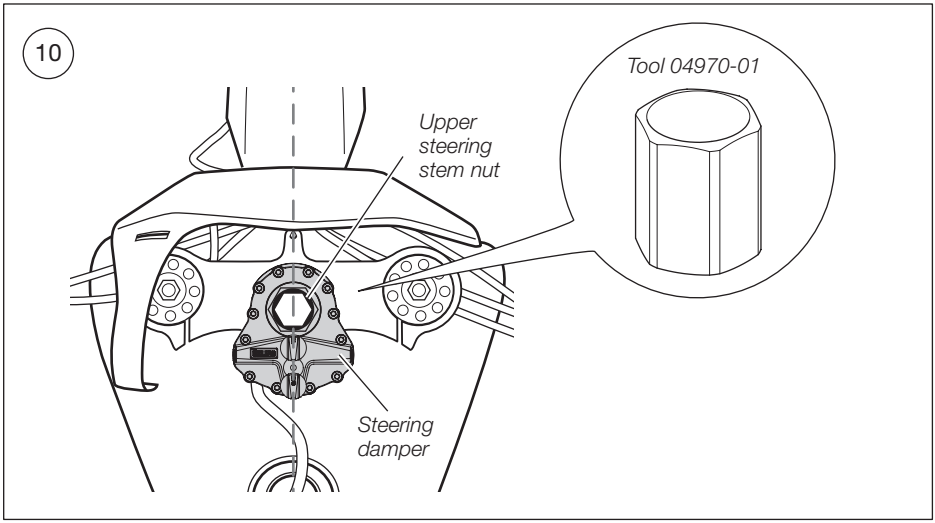

11

Make sure that the steering stops work properly. Tighten the upper triple clamp bolt to recommended tightening torque.

Caution!

The damper should not act as a steering stop since that can damage and possibly break the steering damper.

12

Reinstall all removed parts in reversed order.

13

Install the centre lid by pressing it into the hex opening. Use an M6 screw and a pair of pliers if you must remove the lid.

Caution!

Do not try to remove the lid with a screwdriver - the lid will break!

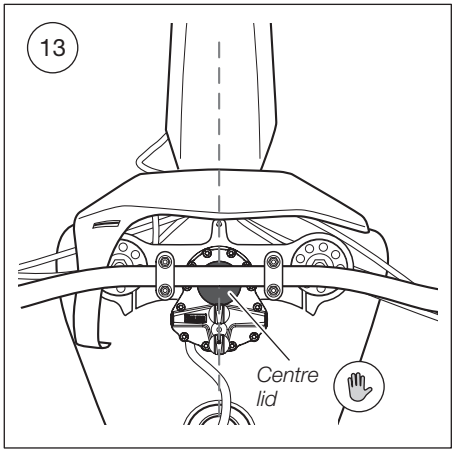

Öhlins products are subject to continuous improvement and development, therefore, although these instructions include the most up-to-date information available at the time of printing, minor updates may occur.

To find the latest information contact your Öhlins distributor. Please consult your Öhlins dealer if you have any questions regarding the contents in this document.

Part no. MI_SD582_1
Issued 2014-10-09

© Öhlins Racing AB. All rights reserved. Any reprinting or unauthorized use without the written permission of Öhlins Racing AB is prohibited.

Öhlins Racing AB
Box 722
S-194 27 Upplands Väsby, Sweden
Phone +46 8 590 025 00
fax +46 8 590 025 80

ADVANCED SUSPENSION TECHNOLOGY

www.ohlins.com